CHAPTER 8
ELECTRICAL SYSTEM

ELECTRICAL COMPONENT 8-1

ELECTRICAL COMPONENTS ANALYSIS 8-2
DIGITAL CIRCUIT TESTER 8-2
MEASURING THE PEAK VOLTAGE 8-2
PEAK VOLTAGE ADAPTER 8-2

MEASURING A LOW RESISTANCE 8-3

IGNITION SYSTEM 8-4
WIRING DIAGRAM 8-4
CHECKING THE SPARK PLUGS 8-5
CHECKING THE IGNITION SPARK GAP 8-5
CHECKING THE SPARK PLUG CAPS 8-6
REMOVING THE SPARK PLUG CAPS 8-6
INSTALLING THE SPARK PLUG CAPS 8-6
CHECKING THE SPARK PLUG CAPS 8-7
CHECKING THE IGNITION COILS 8-7
CHECKING THE CHARGE COIL 8-8
CHECKING THE PULSER COIL 8-9
CDI UNIT 8-10
CHECKING THE CDI UNIT 8-11

IGNITION CONTROL SYSTEM 8-13
WIRING DIAGRAM 8-13
CHECKING THE ENGINE STOP SWITCH 8-14

CHARGING SYSTEM 8-15
WIRING DIAGRAM 8-15
CHECKING THE LIGHTING COIL 8-16
CHECKING THE RECTIFIER/REGULATOR 8-17

ELECTRICAL COMPONENT

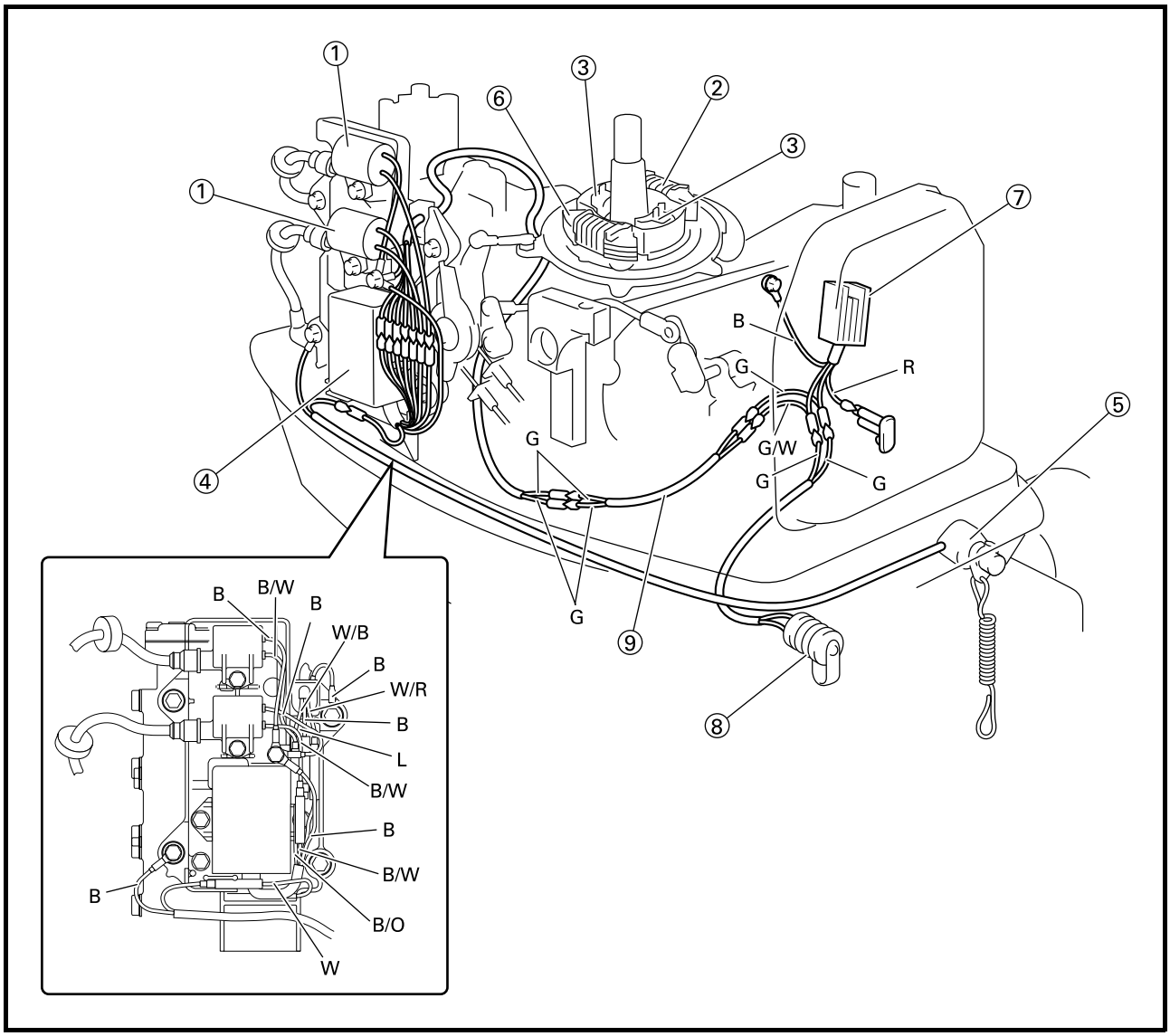

① Ignition coil
② Charge coil
③ Pulser coil
④ CDI unit
⑤ Engine stop switch
⑥ Lighting coil
⑦ Rectifier/regulator (option)
⑧ 2P- Socket (option)
⑨ Extention wire lead (option)

B : Black
Br : Brown
G : Green
L : Blue
W : White
B/O : Black/Orange
B/W : Black/White
G/W : Green/White
W/B : White/Black
W/R : White/Red

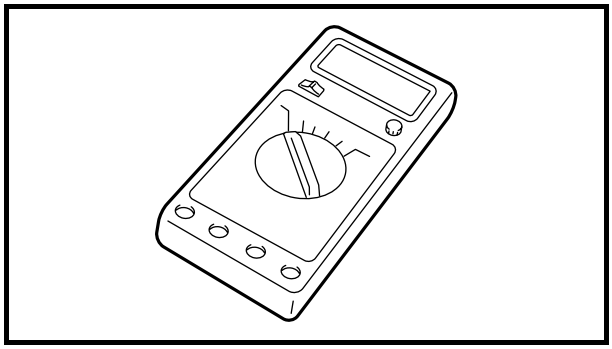

ELECTRICAL COMPONENTS ANALYSIS

DIGITAL CIRCUIT TESTER

	Digital circuit tester **90890-03174**

NOTE:

"○——○" indicates a continuity of electricity which means a closed circuit at the respective switch position.

MEASURING THE PEAK VOLTAGE

⚠ WARNING

When checking the peak voltage, do not touch any of the connections of the digital tester lead wires.

NOTE:

- When checking the condition of the ignition system, it is useful to know the peak voltage.
- Cranking speed is dependant on many factors (e.g., fouled or weak spark plugs, a weak battery). If one of three is defective, the peak voltage will be lower than specification.
- If the peak voltage measurement is not within specification, the engine will not operate properly.

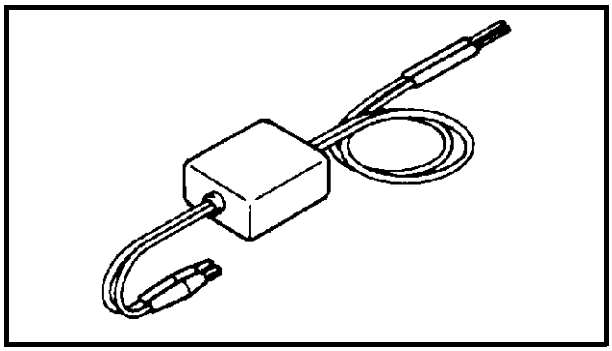

PEAK VOLTAGE ADAPTER

NOTE:

The peak voltage adapter should be used with the digital circuit tester.

	Peak voltage adapter **90890-03172**

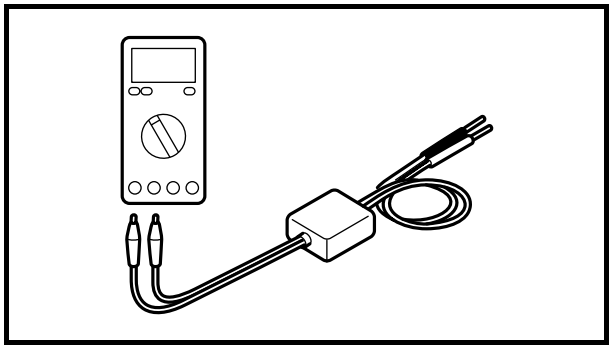

NOTE:

- When measuring the peak voltage, set the selector to the DC voltage mode.
- Make sure the peak voltage adapter lead are properly installed in the digital tester.
- Make sure the positive pin (the "+" mark facing up as shown) on the peak voltage adapter is installed into the positive terminal of the digital tester.
- The test harness is needed for the following tests.

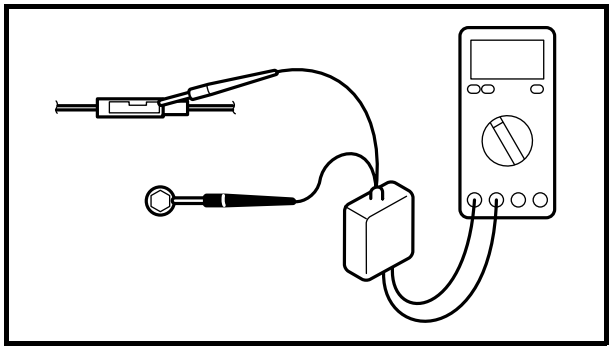

Measuring steps

(1) Connect the peak voltage adapter probes to the connectors.

(2) Start or crank the engine and observe the measurement.

MEASURING A LOW RESISTANCE

When measuring a resistance of 10Ω or less with the digital tester, the correct measurement cannot be obtained because of the tester's internal resistance.
To obtain the correct value, subtract the internal resistance from the displayed measurement.

Correct value
Displayed measurement-internal resistance

NOTE:

The internal resistance of the digital tester can be obtained by connecting both of its probes.

IGNITION SYSTEM

WIRING DIAGRAM

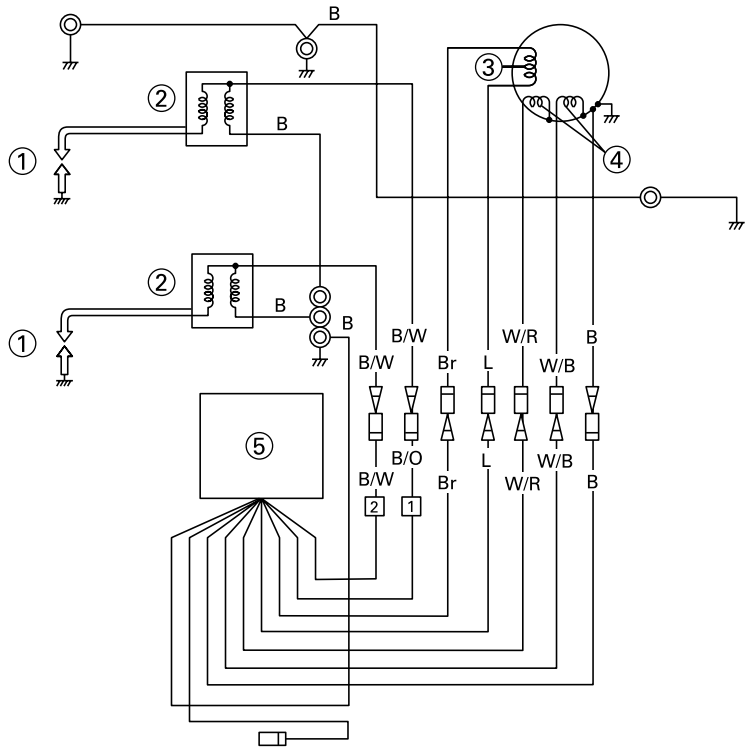

① Spark plug
② Ignition coil
③ Charge coil
④ Pulser coil
⑤ CDI unit

B : Black
Br : Brown
L : Blue
W : White
B/O : Black/Orange
B/W : Black/White
W/B : White/Black
W/R : White/Red

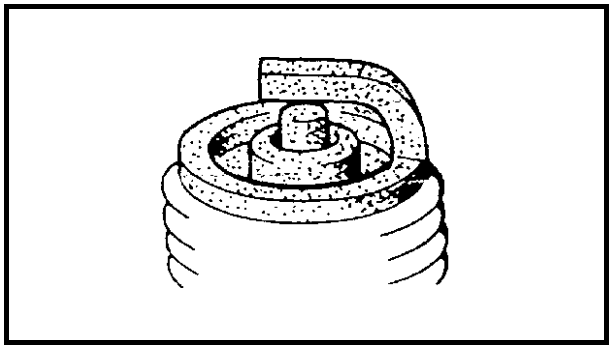

CHECKING THE SPARK PLUGS

Refer to "CHECKING THE SPARK PLUGS" on page 3-22.

Standard spark plug
25B:
NGK BR7HS-10
30H:
NGK BR8HS-10

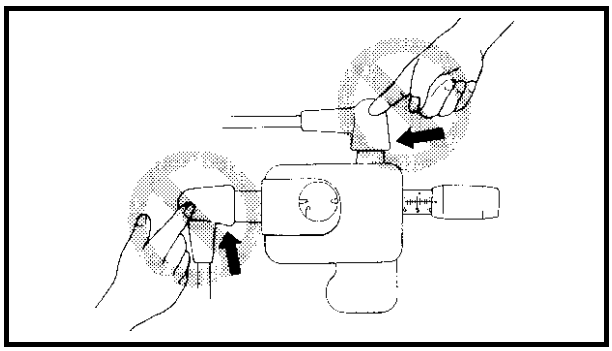

CHECKING THE IGNITION SPARK GAP

⚠ WARNING

- **Do not touch any of the connections of the spark gap tester lead wires.**
- **Do not let sparks leak out of the removed spark plug cap.**
- **Keep flammable gas or liquids away, since this test can produce sparks.**

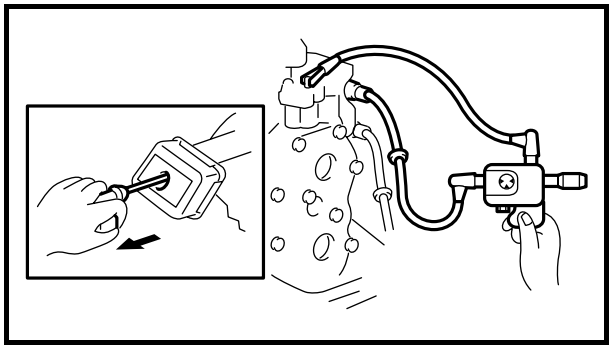

Check:
- Ignition spark gap
  Below specification → Check the ignition system.

Minimum ignition spark gap
8.0 mm (0.31 in)

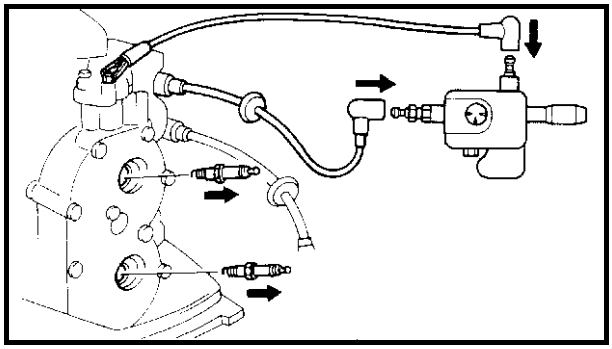

Checking steps

(1) Remove the spark plugs from the engine.

(2) Connect a spark plug cap to the ignition tester.

Ignition tester
90890-06754

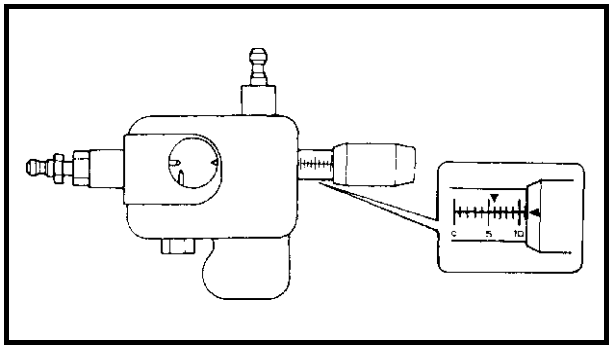

(3) Adjust the ignition spark gap to 11 mm (0.43 in) by turning the adjust knob.

NOTE:
Be careful so that the spark gap does not come excessively off the measuring position [11 mm (0.43 in)].

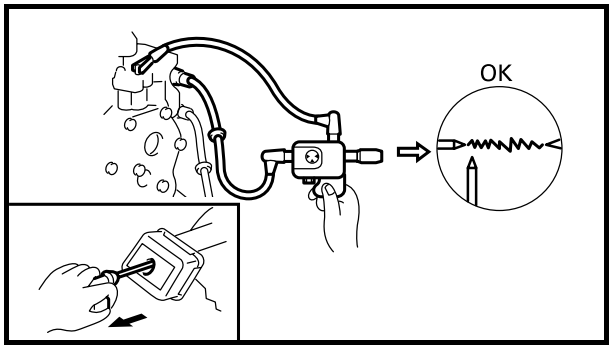

(4) Crank the engine and observe the spark through the discharge window of the ignition tester.

NOTE:

- If there is no spark or the spark is weak, check spark plug cap, ignition coil, pulser coil, charge coil and CDI unit.
- If a good spark is obtained, the problem is not with the ignition system, but possibly with the spark plug(s) or another component.

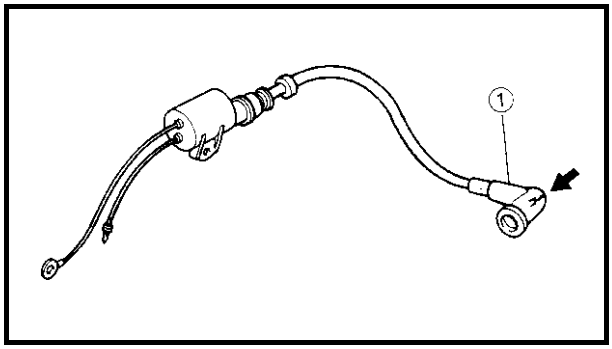

CHECKING THE SPARK PLUG CAPS

Check:

- Spark plug cap ①
  Crack/damage → Replace.

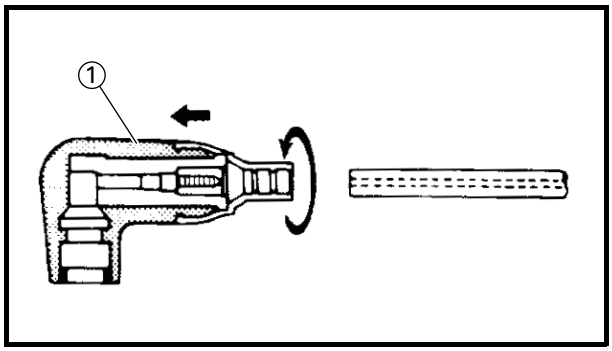

REMOVING THE SPARK PLUG CAPS

Removing steps

(1) Remove the spark plug cap ① by turning the cap.

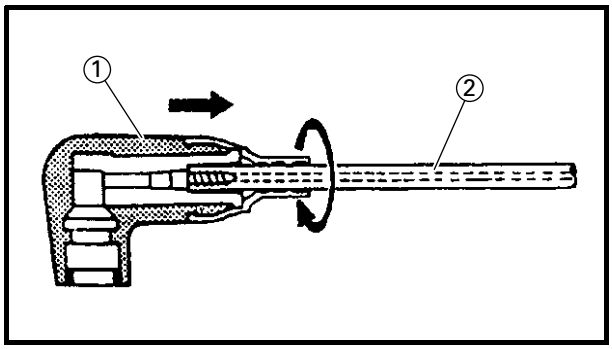

INSTALLING THE SPARK PLUG CAPS

Installing steps

(1) Install the spark plug cap ① to the high-tension cable ② by turning the cap.

NOTE:

Avoid removing the plug cap by pulling the high-tension cable hard. Remove it by turning in and out.

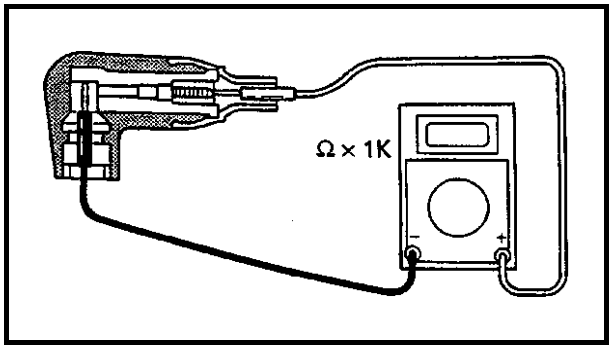

CHECKING THE SPARK PLUG CAPS

Measure:
- Spark plug cap resistance
  Out of specification → Replace.

	Spark plug cap resistance **4 - 6 kΩ**

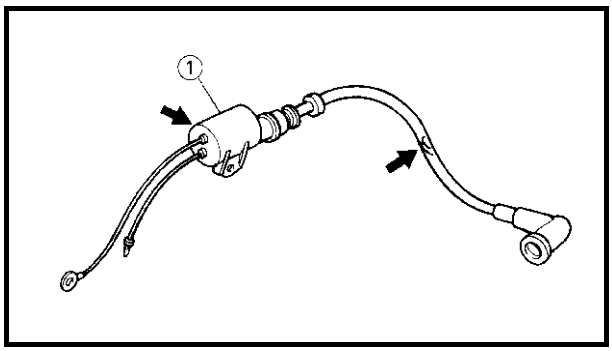

CHECKING THE IGNITION COILS

1. Check:
   - Ignition coil ①
     Crack/damage → Replace.

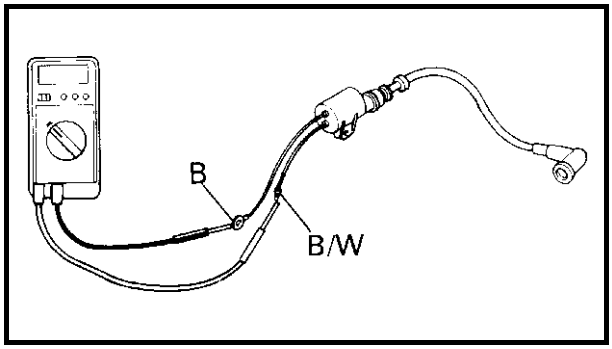

2. Measure:
   - Ignition coil resistance
     Out of specification → Check the peak voltage (charge coil, pulser coil, CDI unit)/Replace.

	Ignition coil resistance	
	Primary **B/W - B**	**Secondary** **B - output**
	0.18 - 0.24 Ω	**2.70 - 3.70 kΩ**

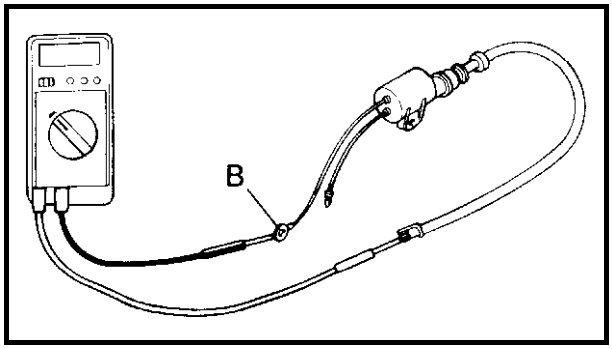

NOTE:
When making secondary leads resistance test, disconnect spark plug cap.

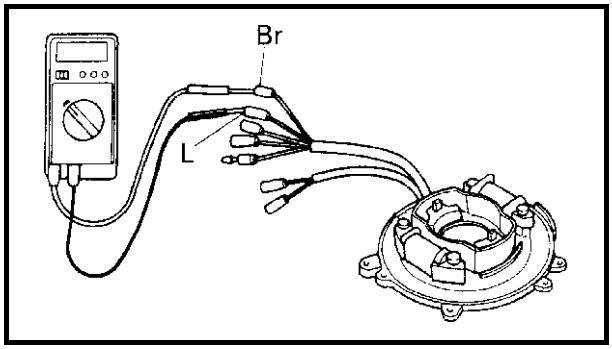

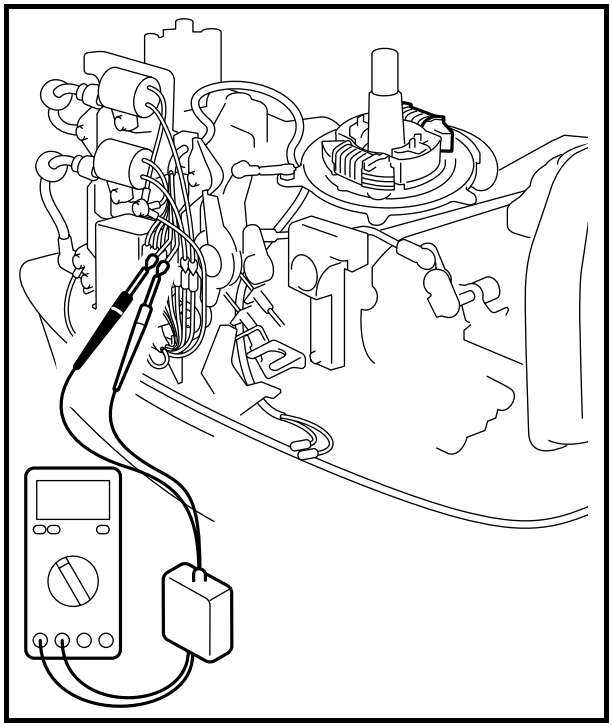

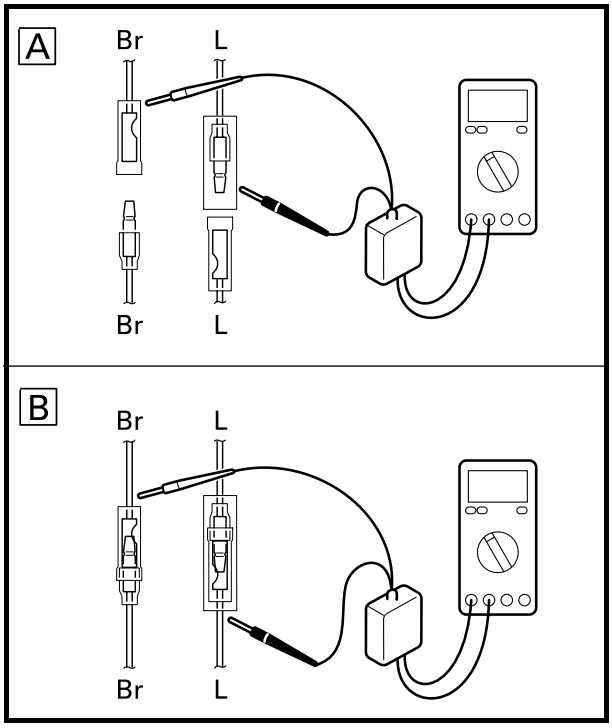

CHECKING THE CHARGE COIL

1. Measure:
   - Charge coil resistance

     Out of specification → Check the peak voltage.

Charge coil resistance	**Br - L** **342 - 418 Ω**

Measuring steps

(1) Disconnect the Brown (Br) and Blue (L) leads from the wire harness.

(2) Connect the tester to the charge coil as shown.

2. Measure:
   - Charge coil output peak voltage

     Below specification → Replace.

Charge coil output peak voltage Br – L				
r/min	**Cranking**		**1,500**	**3,500**
	Opened	**Closed**		
D.C.V.	**146**	**146**	**150**	**150**

NOTE:

For the peak voltage measurement, connect the adaptor as the illustration A for the open circuit, and as the illustration B for the closed circuit.

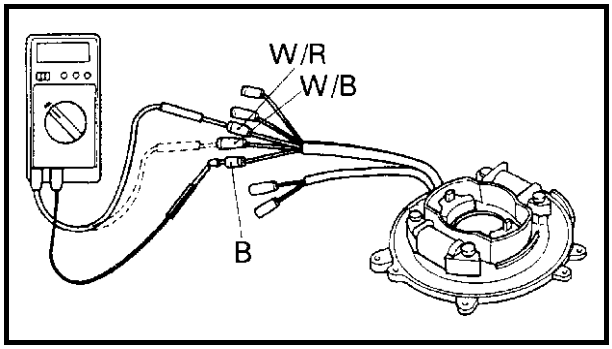

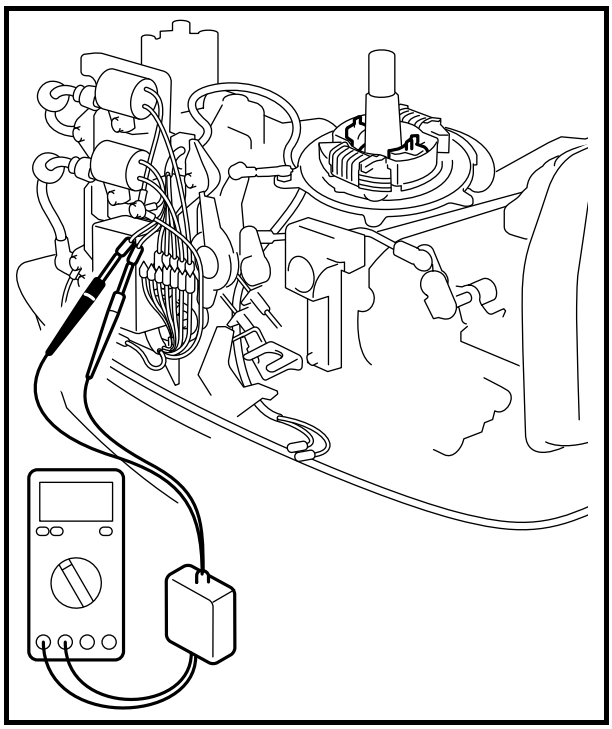

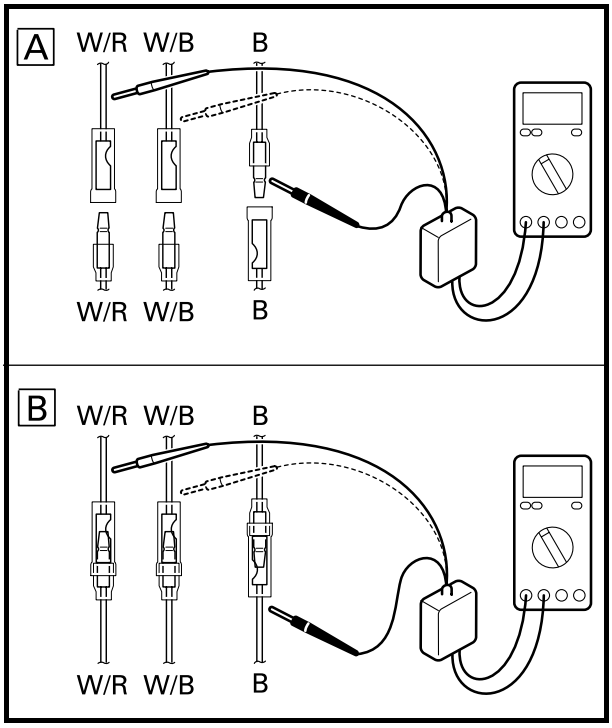

CHECKING THE PULSER COIL

1. Measure:
   - Pulser coil resistance

     Out of specification → Check the peak voltage.

Pulser coil resistance
W/R - B (#1), W/B - B (#2)
311 - 381 Ω

Measuring steps

(1) Disconnect the White/Red (W/R), White/Black (W/B) and Black (B) leads from the wire harness.

(2) Connect the tester to the pulser coil as shown.

2. Measure:
   - Pulser coil output peak voltage

     Below specification → Replace.

Pulser coil output peak voltage W/R – B (#1), W/B – B (#2)				
r/min	Cranking		1,500	3,500
	Opened	Closed		
D.C.V.	6.8	6.7	16.0	26.0

NOTE:

For the peak voltage measurement, connect the adaptor as the illustration A for the open circuit, and as the illustration B for the closed circuit.

CDI UNIT

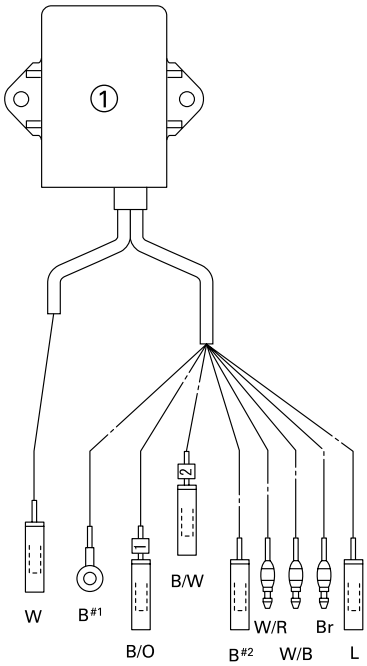

〔Ω〕

Tester ⊖ \ Tester ⊕	W	B#1	B/O	B/W	B#2	W/R	W/B	Br	L
W		∞	∞	∞	∞	∞	∞	∞	∞
B#1	40K – ∞		2K – 8K	2K – 8K	0	10K – 30K	∞	3K – 10K	0
B/O	∞	∞		∞	∞	∞	∞	∞	∞
B/W	∞	∞	∞		∞	∞	∞	∞	∞
B#2	40K – ∞	0	2K – 8K	2K – 8K		10K – 30K	∞	3K – 10K	0
W/R	∞	∞	10K – 30K	∞	∞		∞	∞	∞
W/B	∞	∞	∞	10K – 30K	∞	∞		∞	∞
Br	80K – 1M	80K – 300K	80K – 1M	80K – 1M	80K – 300K	100K – 1M	∞		80K – 300K
L	40K – ∞	0	2K – 8K	2K – 8K	0	10K – 30K	∞	3K – 10K	

∞ : No continuity

① CDI unit

B : Black
Br : Brown
L : Blue
W : White
B/O : Black/Orange
B/W : Black/White
W/B : White/Black
W/R : White/Red

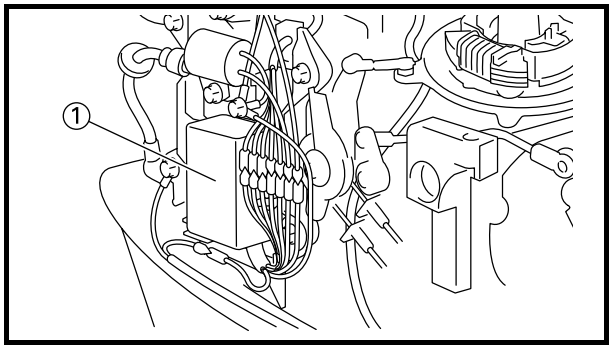

CHECKING THE CDI UNIT

1. Measure:
   - CDI unit ① resistance

     Out of specification → Check the peak voltage.

	Pocket tester **90890-03112**

NOTE:
- Digital circuit tester cannot be used for this check. Use analogue tester.
- CDI resistance values will vary from meter to meter, especially with electronic digital meters. For some testers, polarity of leads is reversed.

Measuring steps

(1) Disconnect the CDI unit ① leads from the wire harness.

(2) Connect the pocket tester (Ω × 1K) to the CDI unit as shown list.
Refer to "CDI UNIT" on page 8-10.

NOTE:
There is a point at which the pointer swings greatly and swings back. Read the point where the pointer has returned to stop.

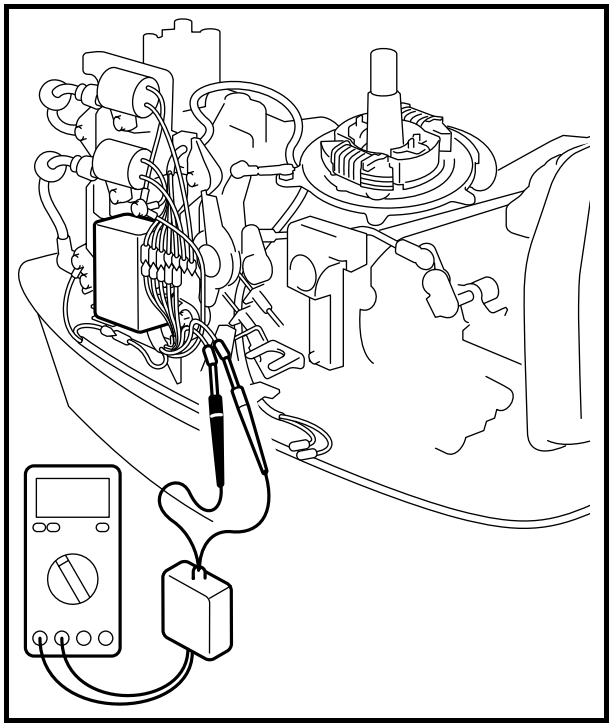

2. Measure:
   - CDI unit output peak voltage
     Below specification → Replace.

CDI unit output peak voltage B/O - B, B/W - B				
r/min	Cranking		1,500	3,500
	Opened	Closed		
D.C.V.	5.5	130.0	135.0	135.0

NOTE:
Before measuring CDI unit output peak voltage, make sure that no abnormality is observed on the charge coil and the pulser coil.

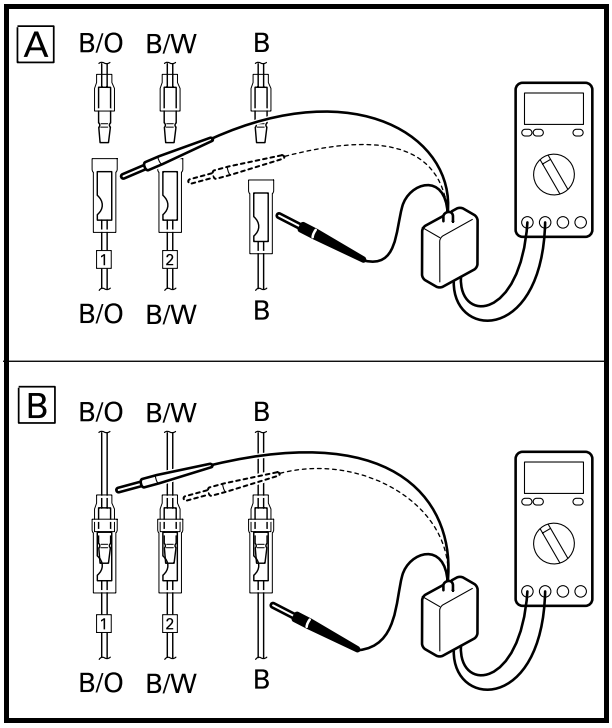

NOTE:
For the peak voltage measurement, connect the adaptor as the illustration A for the open circuit, and as the illustration B for the closed circuit.

IGNITION CONTROL SYSTEM

WIRING DIAGRAM

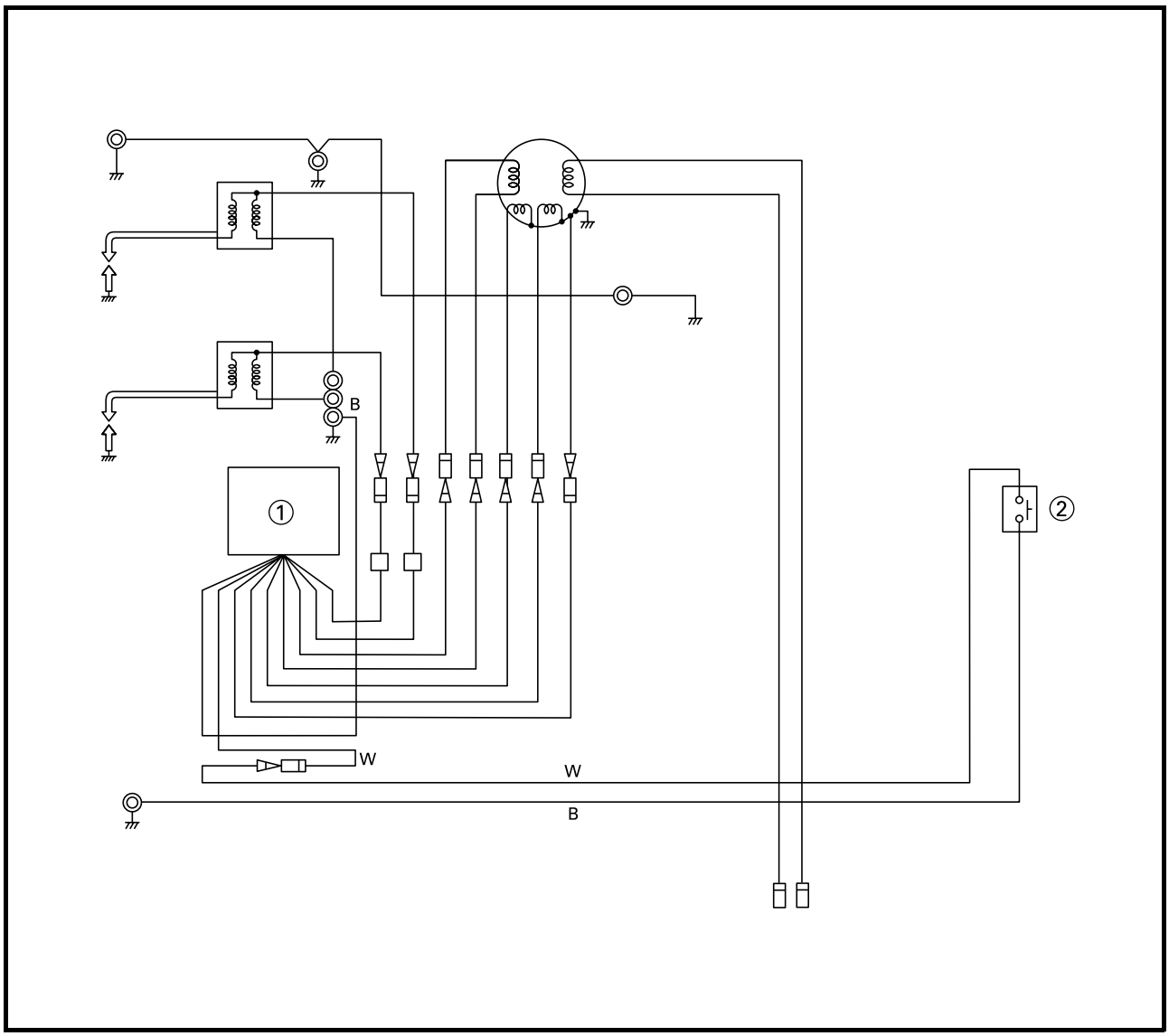

① CDI unit
② Engine stop switch

B : Black
W : White

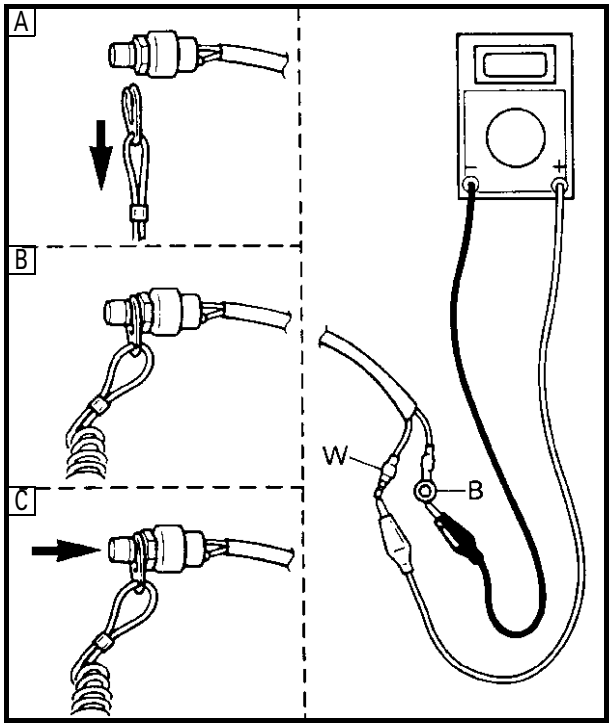

CHECKING THE ENGINE STOP SWITCH

Check:
- Continuity
  Out of specification → Replace.

	Lead color	
	White	**Black**
Remove the lock-plate A	○———	———○
Install the lock-plate B		
Push the button C	○———	———○

CHARGING SYSTEM

WIRING DIAGRAM

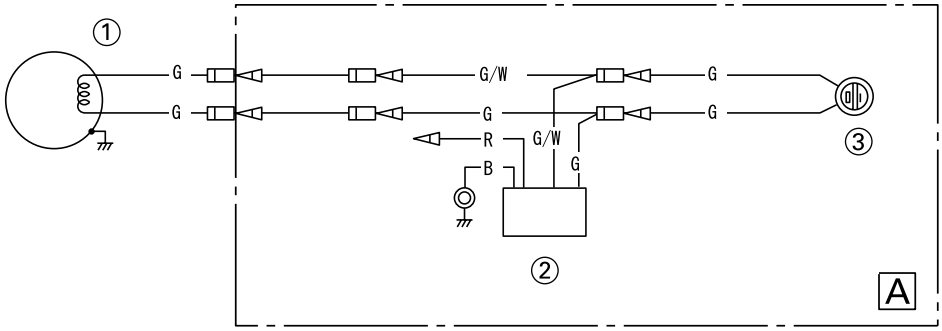

① Lighting coil
② Rectifier/regulator (option)
③ 2P- Socket (option)

B : Black
G : Green
R : Red
G/W : Green/White

A Option

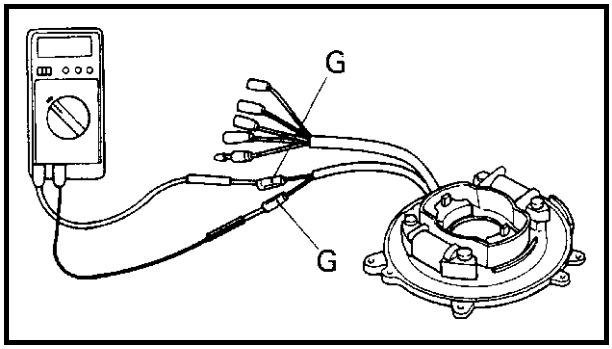

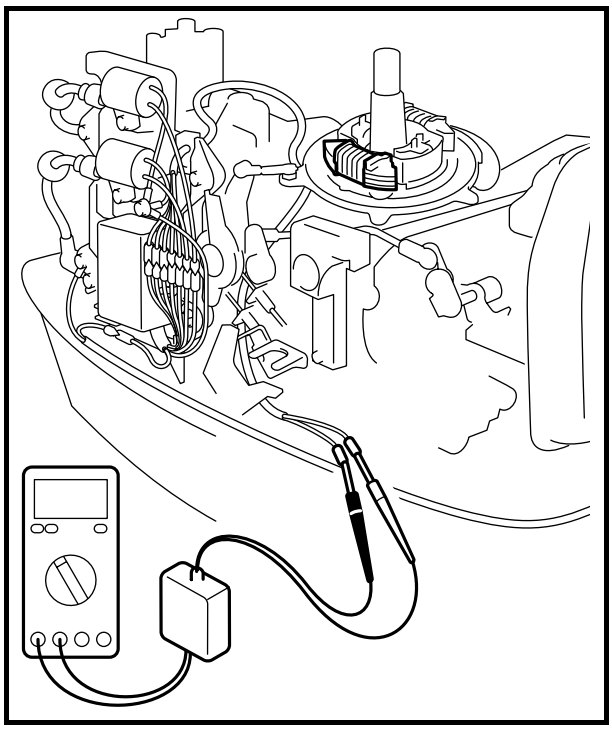

CHECKING THE LIGHTING COIL

1. Measure:
   - Lighting coil resistance

     Out of specification → Checking the peak voltage.

Lighting coil resistance:
G – G
0.31 - 0.37 Ω

Measuring steps

(1) Disconnect the Green (G) leads from the wire harness.

(2) Connect the tester to the lighting coil as shown.

NOTE:
When measuring the resistance of 10Ω or less using the digital tester, the correct measurement cannot be obtained.
Refer to "MEASURING A LOW RESISTANCE" on page 8-3.

2. Measure:
   - Lighting coil output peak voltage

     Below specification → Replace.

Lighting coil output peak voltage
G – G

r/min	Cranking			
	Opened		Closed	
D.C.V.	4.6		—	
r/min	1,500	3,500	1,500	3,500
	Closed		Opened	
D.C.V.	—	—	14.7	30.0

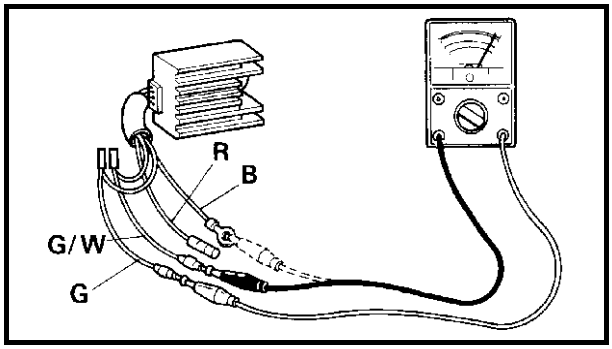

CHECKING THE RECTIFIER/ REGULATOR

1. Check:
   - Continuity of rectifier/regulator
     Out of specification → Check the peak voltage.

Tester ⊕ / Tester ⊖	Green	Green/ White	Red	Black
Green		∞	○	∞
Green/White	∞		○	∞
Red	∞	∞		∞
Black	○	○	○	

○ : Continuity ∞ : Discontinuity

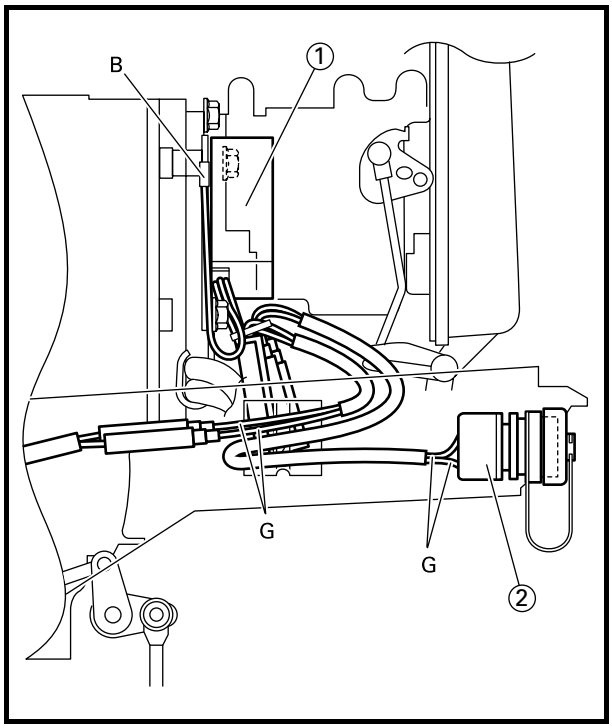

Checking steps

(1) Disconnect the Green/White (G/W) and Green (G) leads from the lighting coil leads and 2P-Socket ② leads.

(2) Disconnect the Red (R) lead from the cap.

(3) Remove the Black (B) lead from the body earth.

(4) Connect the pocket tester (Ω × 1) to the rectifier/regulator ①.

	Pocket tester **90890-03112**

NOTE:
Digital tester cannot be used for this inspection.

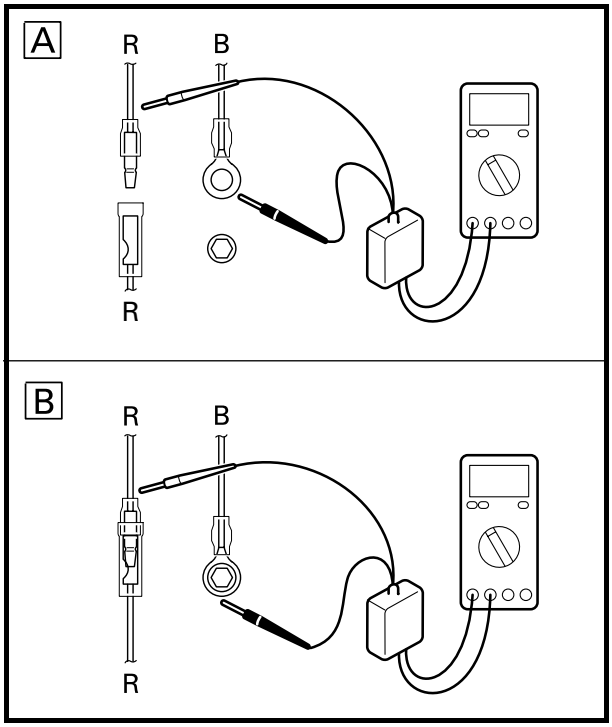

2. Measure:
   - Rectifier/regulator output peak voltage

     Below specification → Replace the rectifier.

Output peak voltage R – B				
r/min	Cranking		1,500	3,500
	Opened	Closed		
D.C.V.	5.20	10.8	12.40*	13.20*

NOTE:
- Before measuring the rectifier peak voltage, make sure that no abnormality is observed on the lighting coil.
- For the peak voltage measurement, connect the adaptor as the illustration A for the open circuit, and as the illustration B for the closed circuit.

* Refer to the "ELECTRICAL" on page 2-7.